Project #2: VLSI Active-RC, Gm-C Circuit and Behavioral Modeling

Project #2.1

Linear A/D Converter Modeling

The Linear A/D Converter design for this project uses a filter core that is composed of two integrators in series with two adders which feed the input signal plus scaling factor 1 or -1 into the integrators. The filter core is followed by an adder that sums the noise signal N with the input signal. The output signal has a feed-back loop with positive and negative scalers which connect back to the adders that feed into the two integrators. The adders in the filter core compute the difference between the input and output feedback signals. The integrators drive that difference in that signal over time and minimize the difference towards zero (by driving 1/s in the transfer function). The scalers determine the response time and damping factor of the converter in order to correct the difference in the input signal and the digitally quantized output signal feedback.

Figure 1.1: A/D Converter Schematic

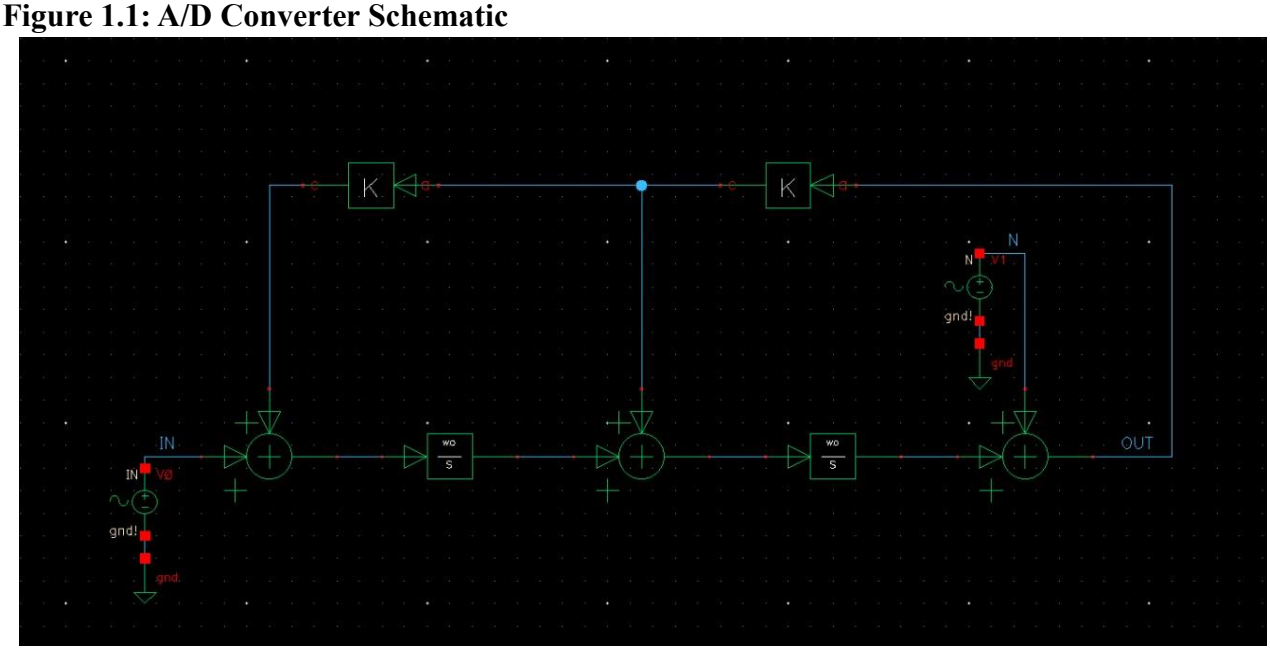

Figure 1.2: Gain and Phase Response of Signal Transfer Function

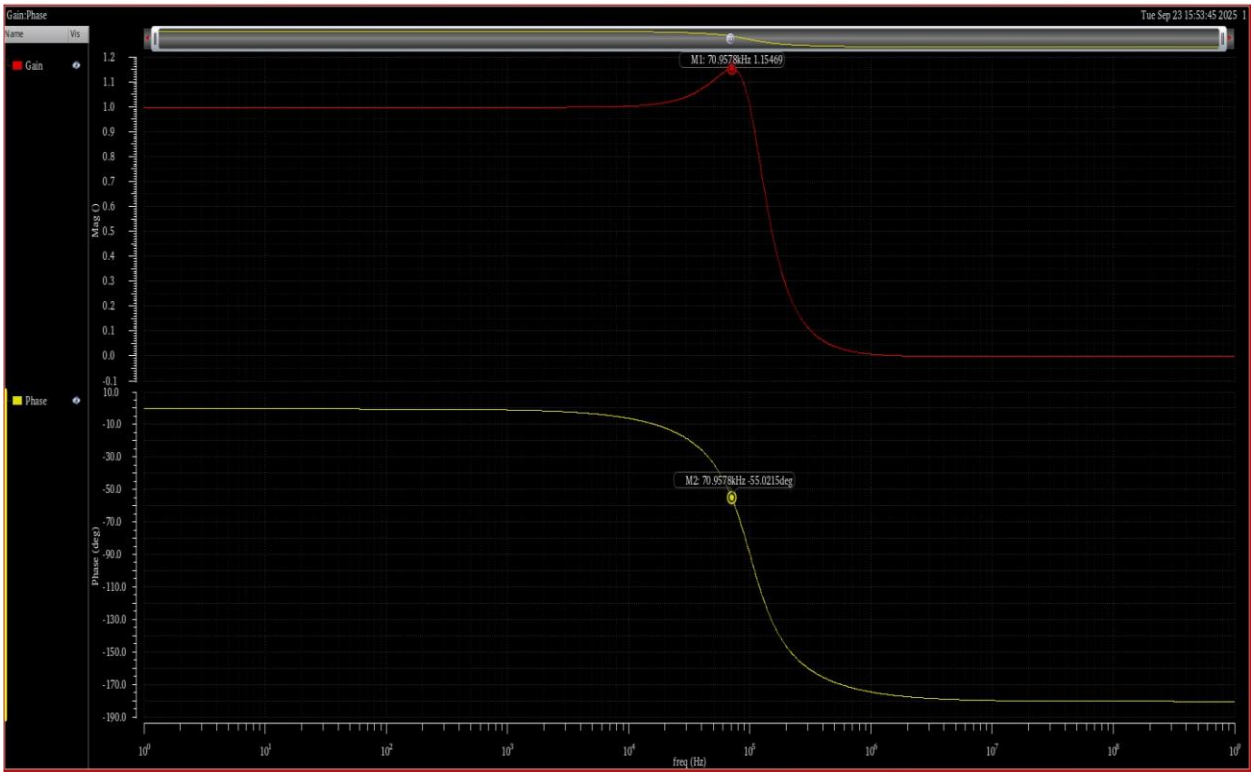

Figure 1.3: Gain and Phase Response of Noise Transfer Function

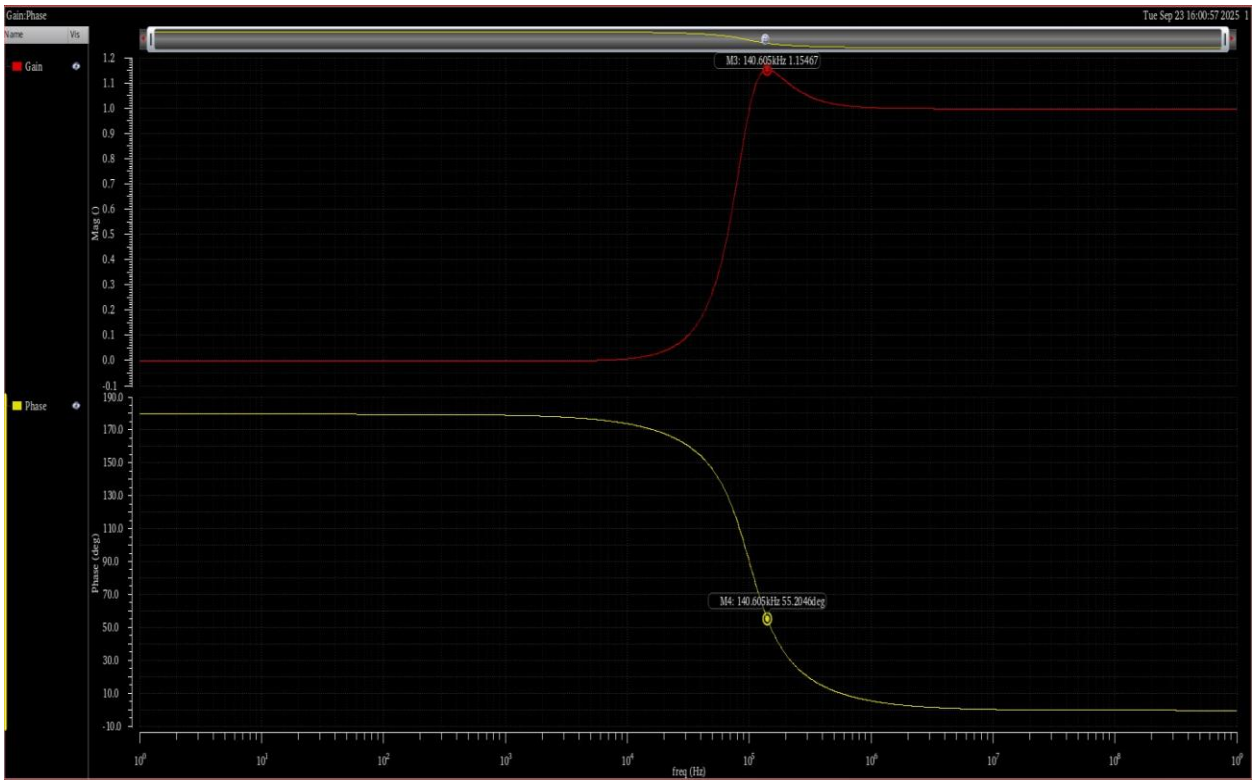

Project #2.3 VLSI Opamp and Gm Circuit Design & Characterization

We designed a two-stage CMOS operational amplifier using the given circuit structure and design constraints. The bias currents were set to 20 µA for the differential input stage and 320 µA for the output stage, with VDD = 3 V and VSS = 0 V. Device widths and lengths were sized to achieve a DC gain greater than 60 dB, a unity gain frequency above 100 MHz, and a phase margin exceeding 60° at the TT corner. After sizing, we verified the design in AC simulation, confirming that the specifications for gain, bandwidth, and stability were satisfied.

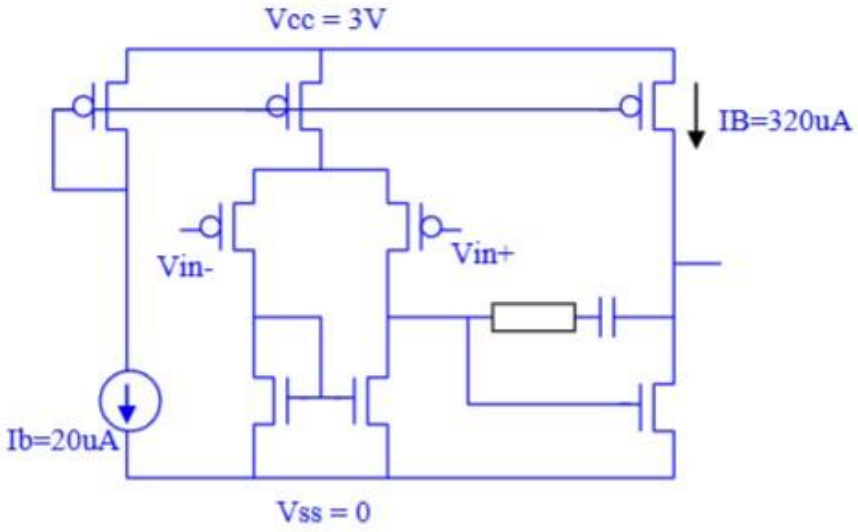

a.

sizes/values for the circuit:

Figure 2.1:Cadence Circuit:

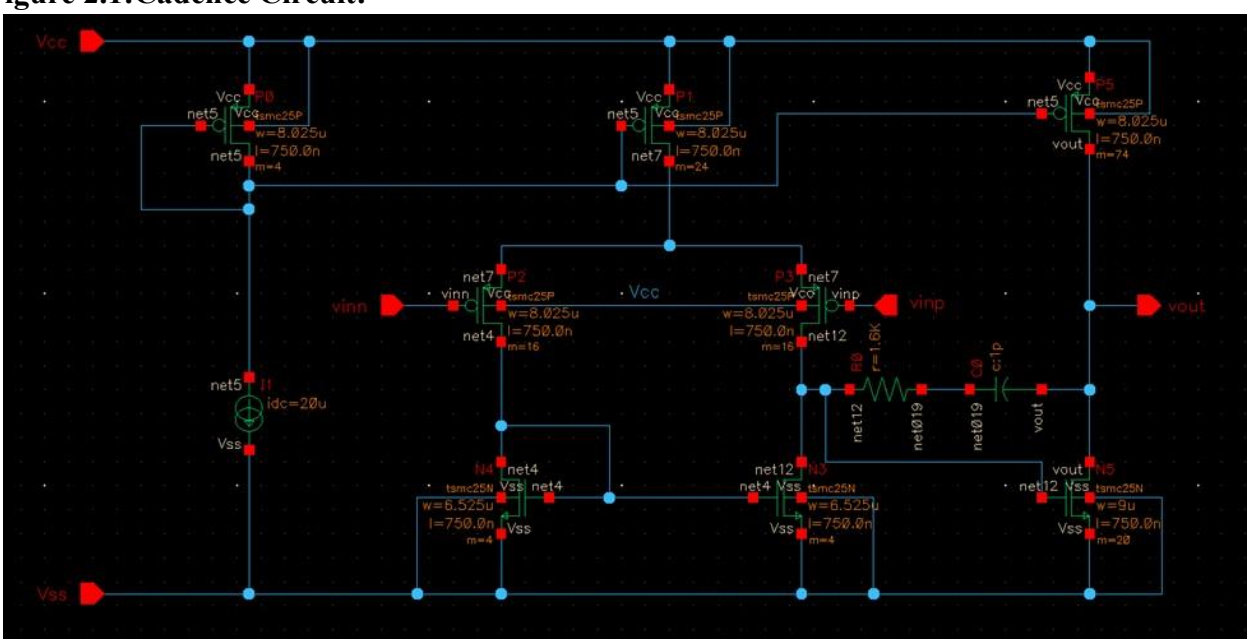

Figure 2.2:Symbol for the test:

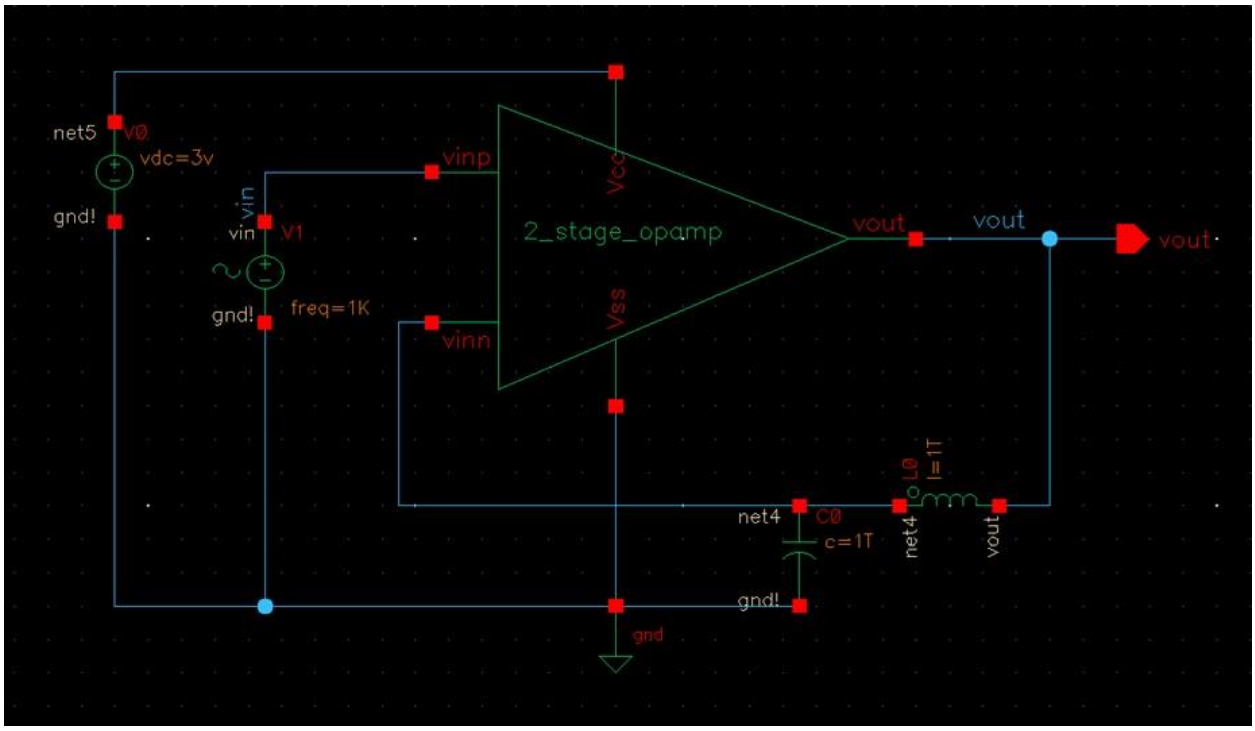

Figure 2.3:Devices In Saturation region: 2

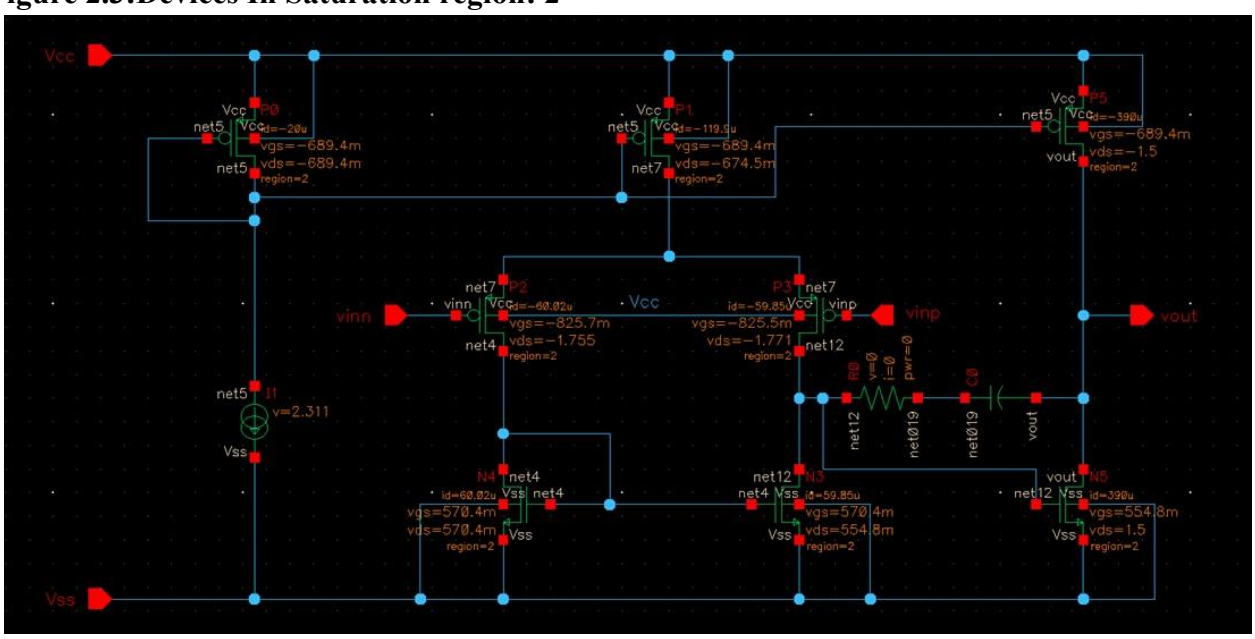

b. (i) Dc gain > 60dB, (ii) unity gain frequency >100Mhz, (iii) phase margin >60dB @ TT corner

Figure 2.4:AC Sims in Waveform format:

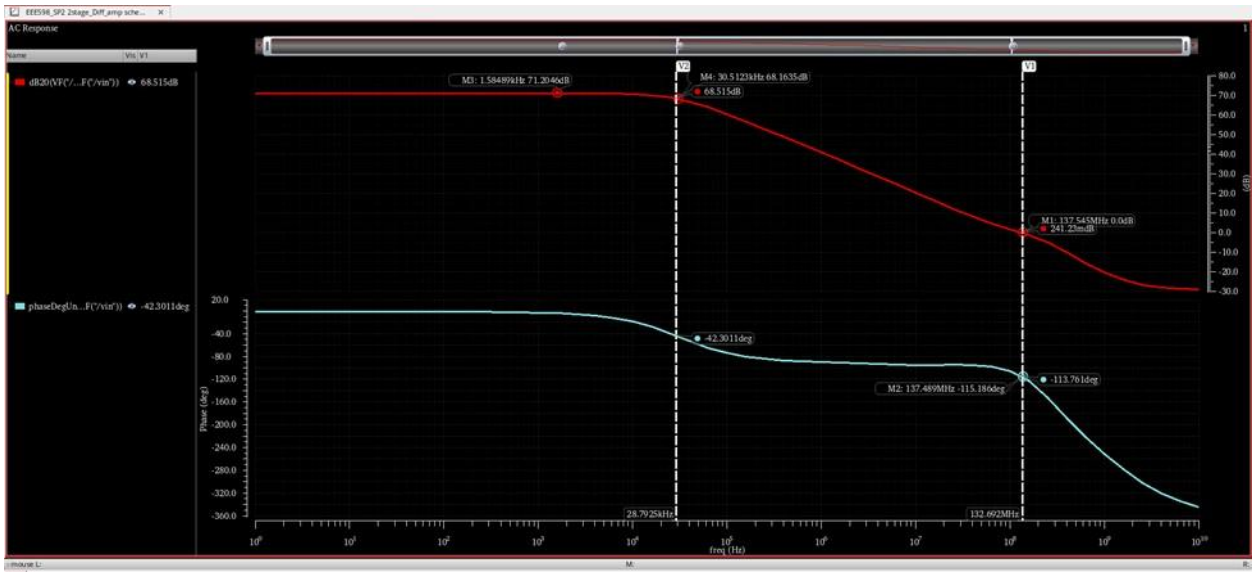

Dc gain = 71dB, unity gain frequency =137Mhz, phase margin = 67deg

DC Differential Transconductance, DC Gain, Unity Gain Bandwidth, and Differential Output Impedance for the Differential VLSI Gm Circuit

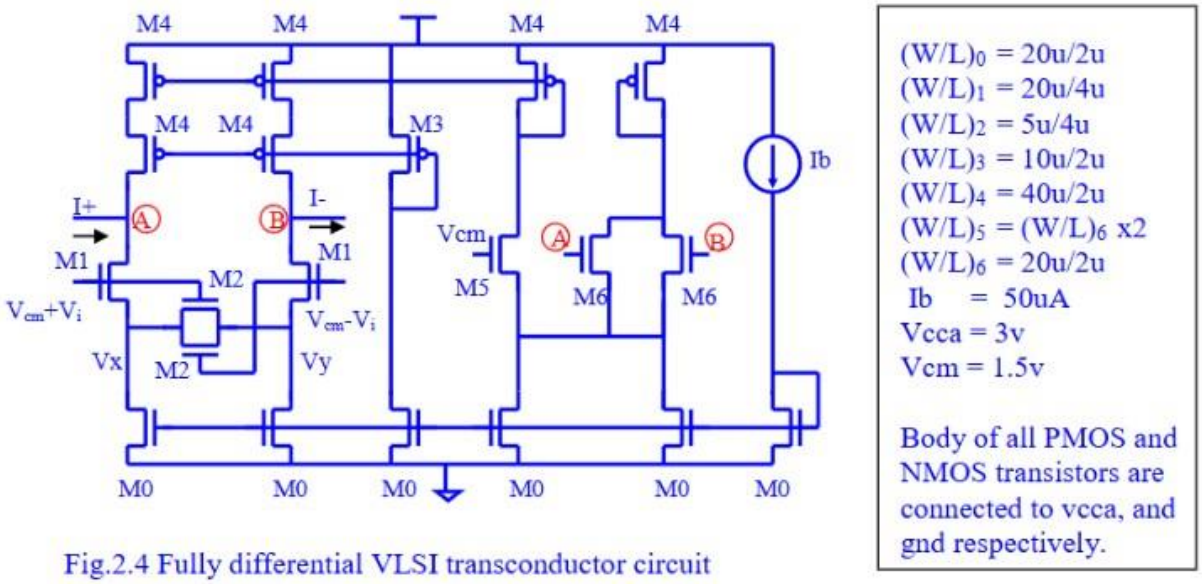

Fig.2.4 Fully differential VLSI transconductor circuit

To characterize the fully differential OTA, we set up testbenches to extract the required parameters. For dc differential transconductance (Gm), we applied small differential input voltages at the positive and negative input terminals while fixing the common-mode voltage (Vcm = 1.5 V). By measuring the resulting differential output current, we calculated the plot of the Iout–Vin curve, giving the Gm.

For the dc gain and unity gain bandwidth, we used an AC analysis. A small-signal differential sinusoidal input was applied, and the frequency response of the output was measured. From the magnitude plot, the low-frequency gain was taken as the dc gain, while the frequency at which the gain dropped to 0 dB gave the unity gain bandwidth.

Finally, to obtain the differential output impedance, we used an AC test source connected at the output nodes with the inputs tied to the bias point. By sweeping frequency and measuring the ratio of output voltage to output current, we determined the impedance profile. These simulations together verified the OTA's small-signal parameters and confirmed that the design met the intended specifications.

Figure 3.1:Cadence Circuit:

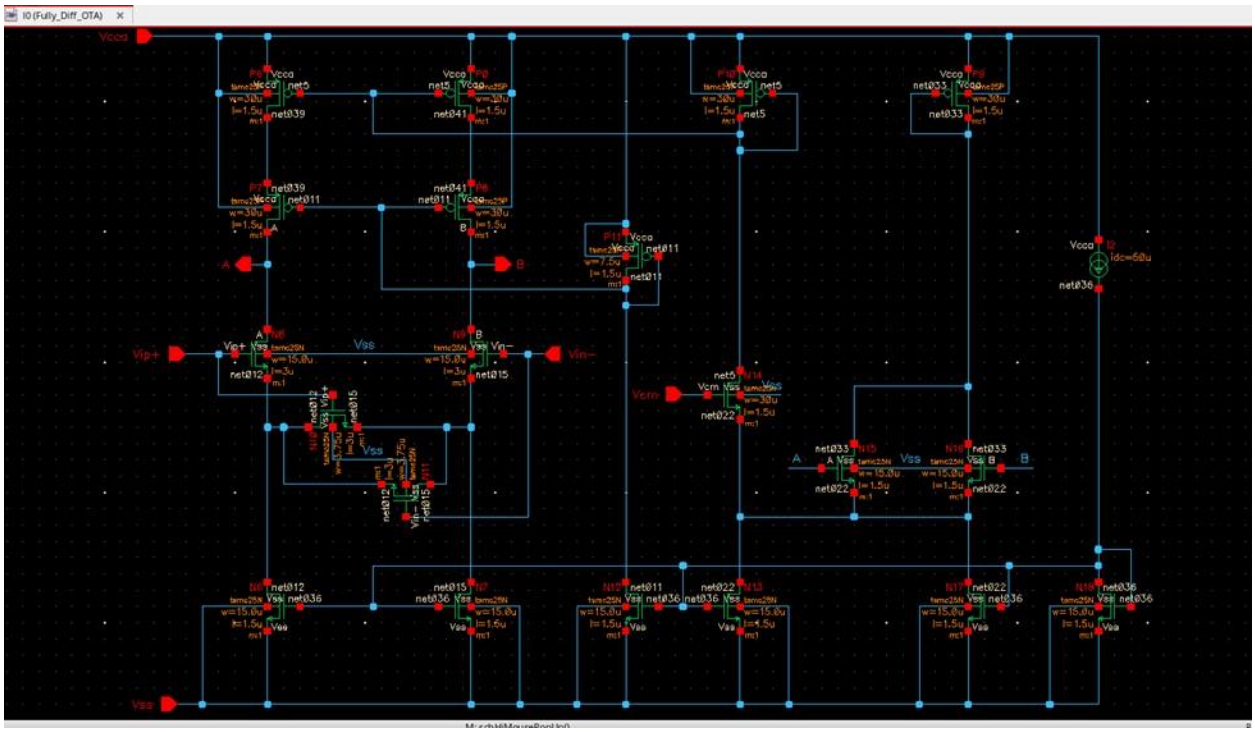

Figure 3.2:Devices In Saturation region: 2

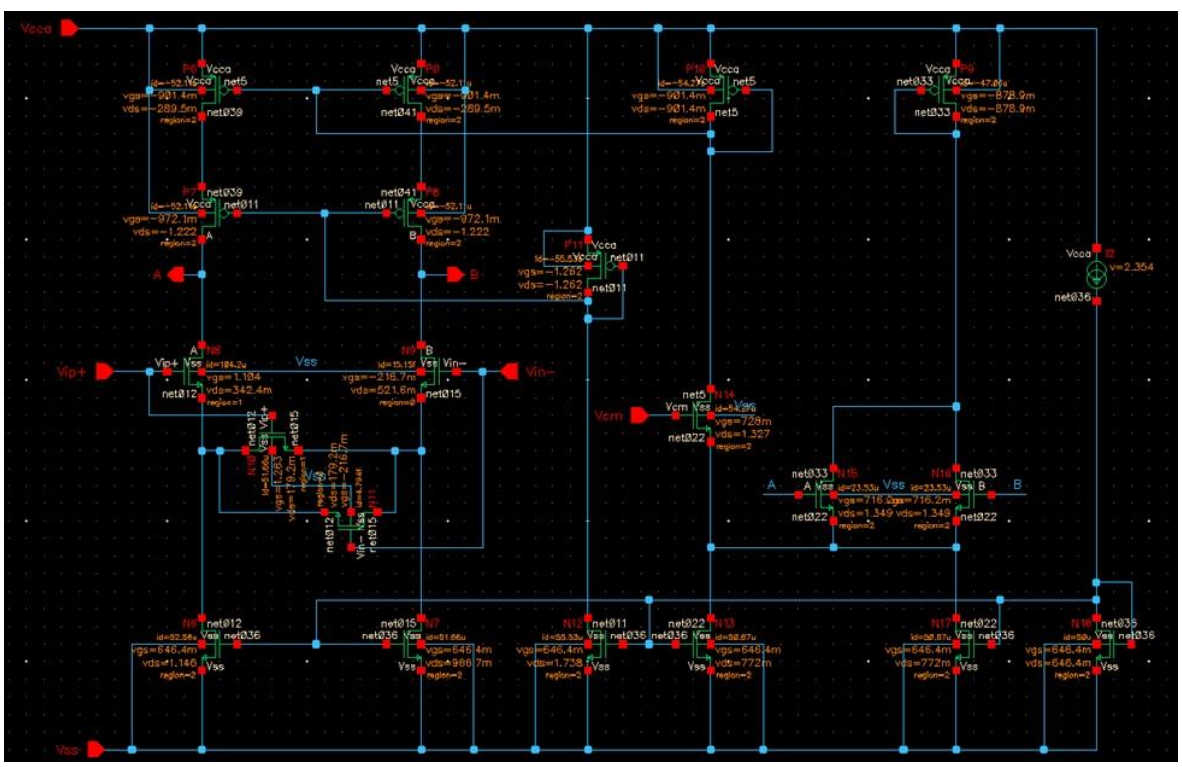

(i)

dc differential transconductance

Figure 3.3:Symbol with setup for measuring the transconductance(gm)

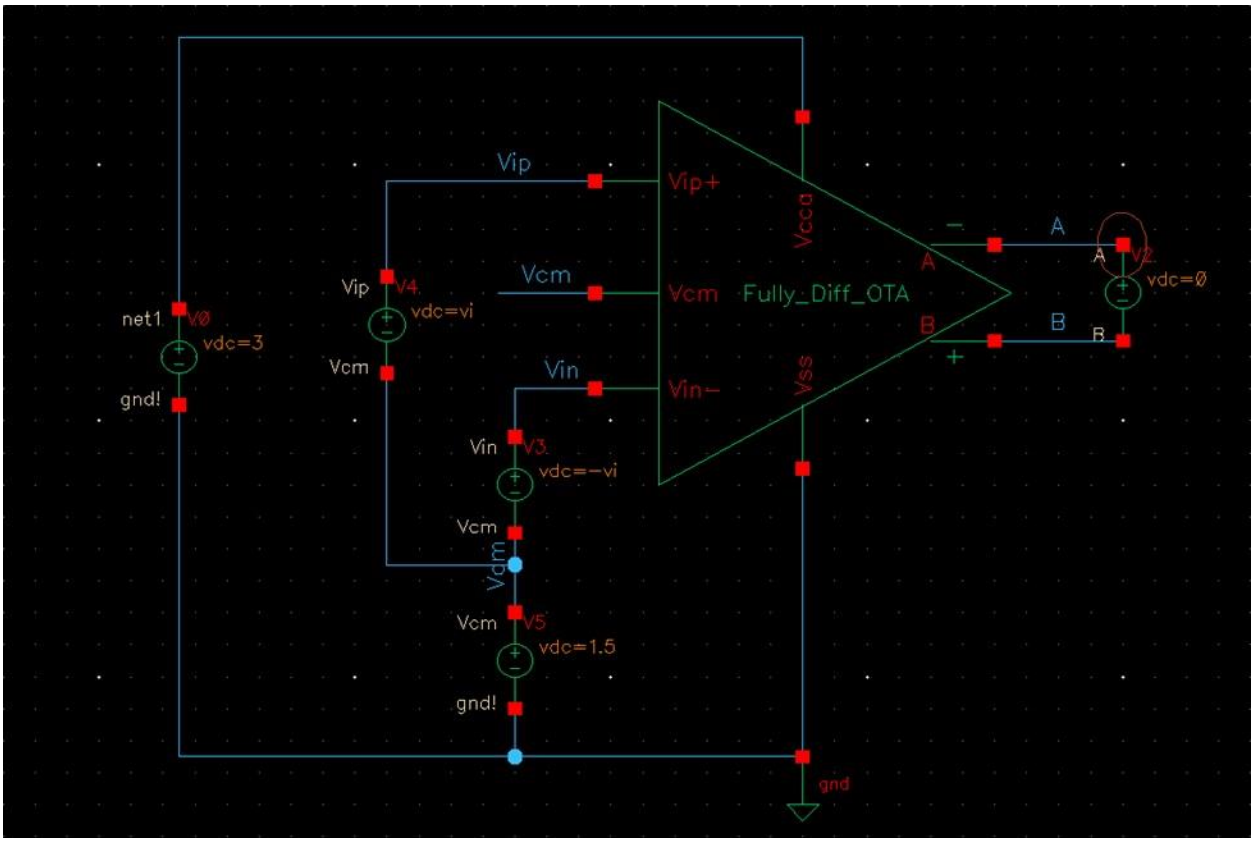

Figure 3.4:Differential Transconductance plot:

(ii)

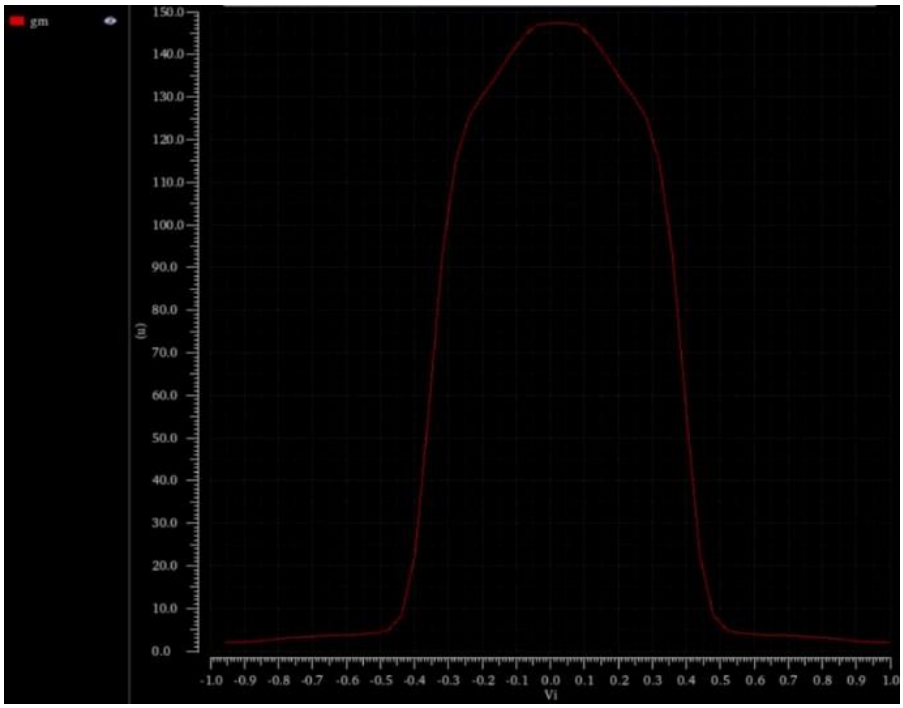

dc gain

Figure 3.5:Symbol under test to find the DC Gain, UGB, Gain & Phase

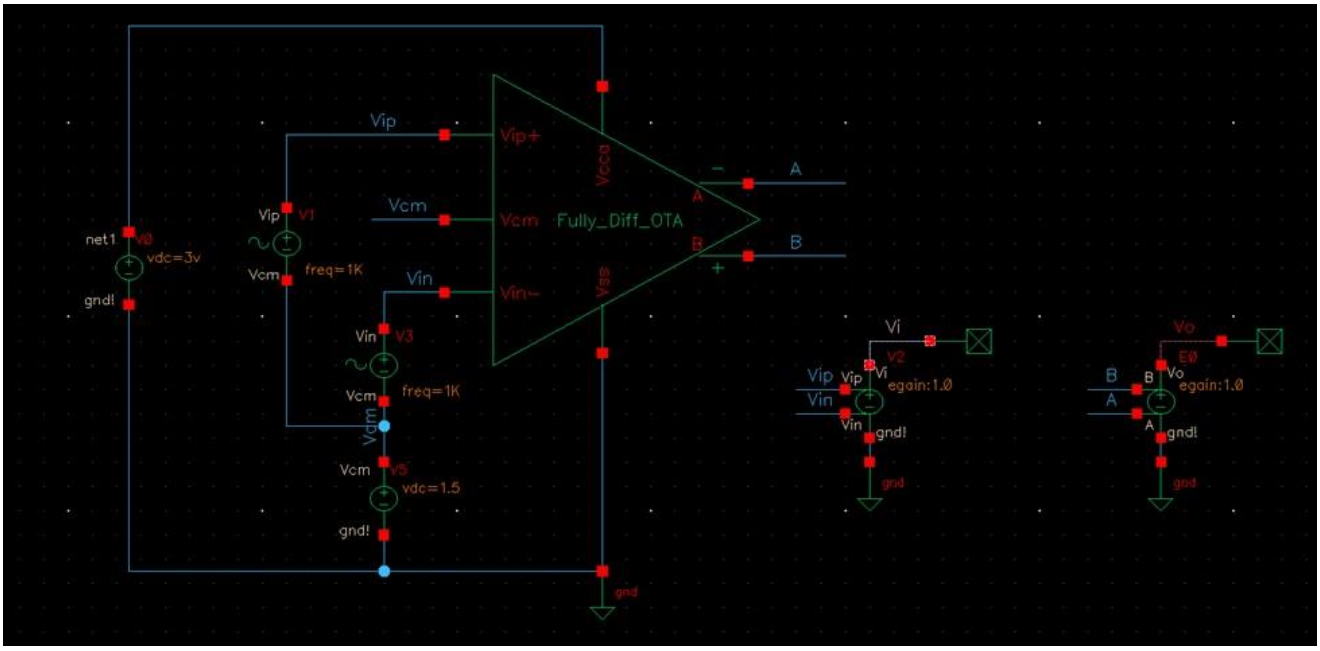

(iii)

Figure 3.6:In this plot one can see that the DC Gain is 40 dB

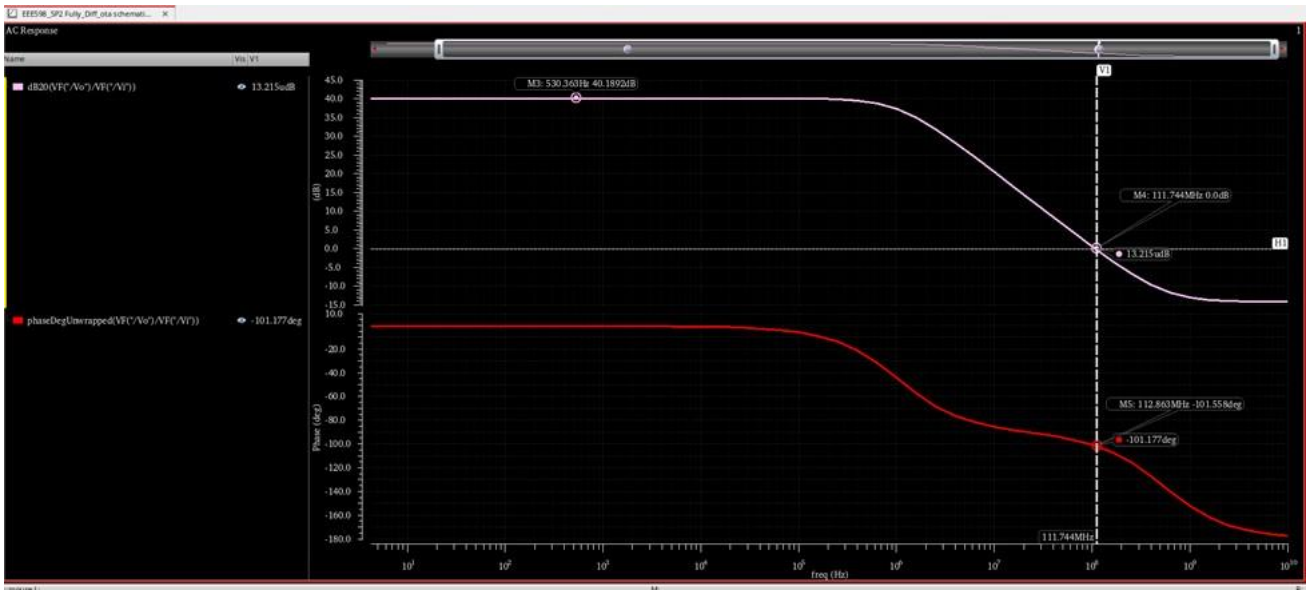

UGB is 111.74 Mhz with a Phase Margin as 79 degrees

unity gain bandwidth and differential output impedance

UGB is 111.74 Mhz (from last figure)

Figure 3.6:Symbol under test to find differential output impedance.

(iv)

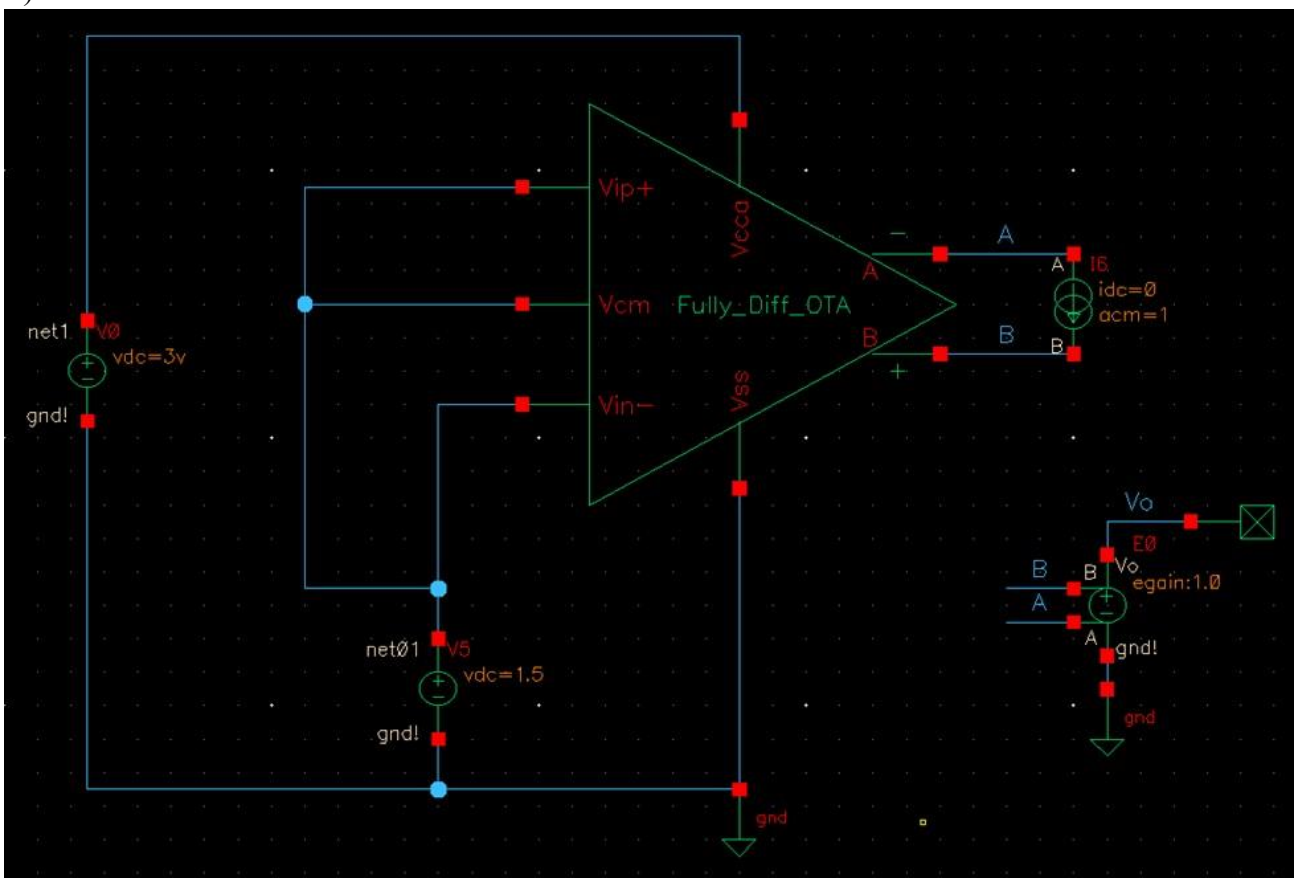
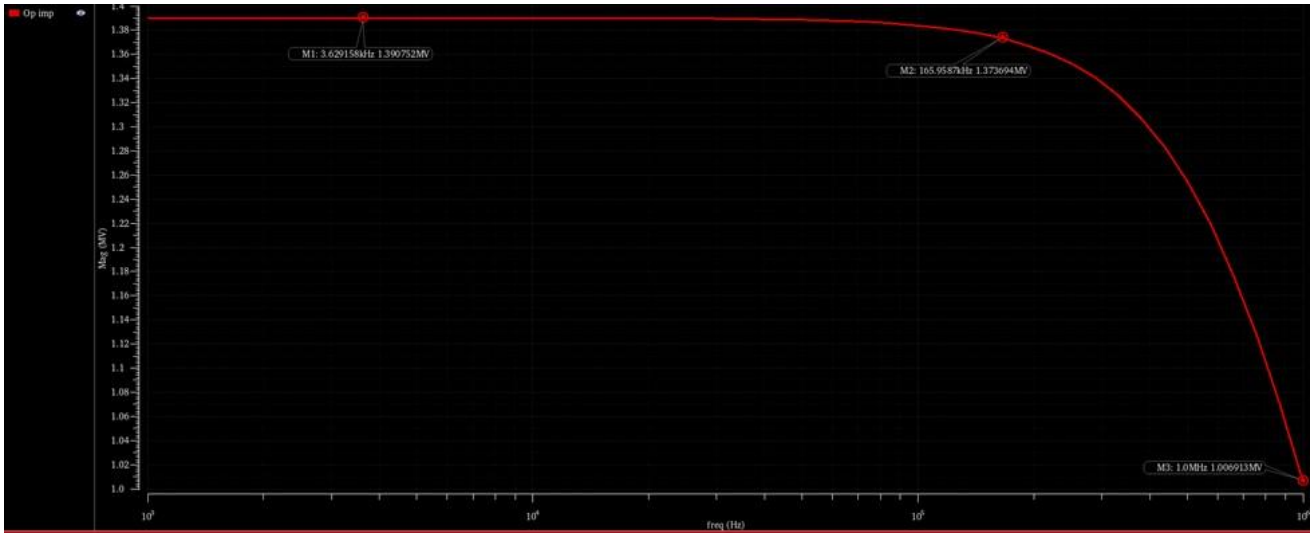
Figure 3.7:Differential output impedance plot